Installation Instructions Double-Hung, Single-Hung, Casement, Awning, Sliding, Picture & Shapes

New Construction Nailing Fin Windows

UNITED
WINDOW & DOOR

Project Requirements:

- Read guide before starting installation. Read all warnings and cautions during installation.
- Check with your local building code official to identify and confirm compliance with local building code requirements.
- These instructions show images of a window installation into a wood frame wall construction with weather protection in place unless otherwise noted.
- Instructions may not be right for all installations due to building design, construction material or methods used and/or building site conditions. Consult a contractor or architect for recommendations.
- Existing window frame, wall and weather-resistant barrier must be adequate and window frame and wall must be structurally sound.
- Window must be installed to be plumb, level and square.
- Combination units must be individually supported to the rough opening.
- Anchoring screws must attach to framing members.
- Failure to follow these instructions may void product warranty.
- Due to ongoing product changes, updated test results and/or new industry best practices, this installation procedure may change over time. Visit the manufacturer's website for current installation instructions.
- Visit the manufacturer's website for additional installation information and/or guides.

Tools & materials required:

Safety glasses

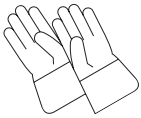
Work gloves

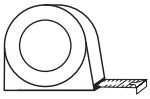
Tape measure

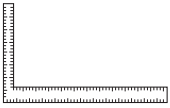
Framer's square

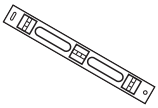
Level

Putty knife

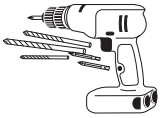
Power driver and bits

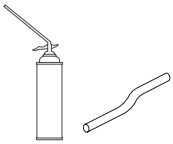
Minimum-expanding foam sealant or backer rod with sealant

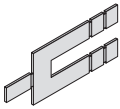
Shims

Caulk gun

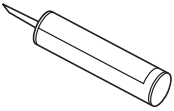
Interior and exterior window grade sealant

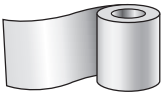
Self-adhering flashing (Minimum 4" wide)

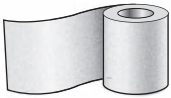
Formable self-adhering sill flashing (Minimum 6" wide)

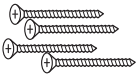
Approved fasteners (See fastener chart)

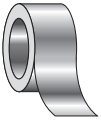
House wrap tape

Hammer

Warnings and Cautions:

⚠ WARNING

- Use caution when working at elevated heights and around unit openings. Follow manufacturers instructions for ladders and/or scaffolding. Failure to do so may result in injury or death.
- Follow manufacturers' instructions for hand or power tools. Always wear safety glasses. Failure to do so may result in injury and/or product damage.
- Windows and doors can be heavy. Use safe lifting techniques and a reasonable number of people with enough strength to lift, carry and install window and door products to avoid injury and/or product damage.
- Sill weep doors are small parts and, if swallowed, could pose a choking hazard to young children.
- Support window in opening while shimming. Failure to do so may result in injury and/or product/property damage.
- Do not position sash at a 90° angle. Sash may disengage from frame and may cause injury.

CAUTION

- Unless specifically ordered, these windows are not equipped with safety glass, and if broken, could fragment causing injury. Many laws and building codes require safety glass in locations adjacent to or near doors. These windows are available with safety glass that may reduce the likelihood of injury when broken. Information on safety glass is available from your sales representative.
- Do not apply any type of film to glass. Thermal stress conditions resulting in glass damage could occur.
- The use of movable insulating materials such as window coverings, shutters, and other shading devices may damage glass and/or vinyl.
- Follow instructions of foam, sealant and flashing manufacturer regarding material application and compatibility with this product.
- When insulating between unit frame and rough opening or between units when joining, DO NOT over-pack batt insulation or overfill with foam. Bowed jambs will result affecting product performance and/or proper operation of unit.

Warnings and Cautions:

CAUTION

- ♦ Do not drill or fasten through sill. Product and/or property damage will result.
- ♦ Do not store windows flat or in the sun or product damage may occur.
- ♦ Remove or cut ventilation holes in plastic shipping wrap if windows are not installed immediately or product damage may occur.
- ♦ Weep holes must face the exterior and must be located at the bottom of the window or product and/or property damage may occur.

CAUTION

Do not cover weep holes.

Property damage may result.

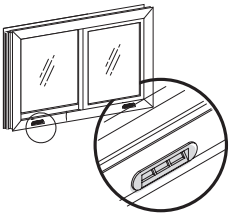

NOTICE

Buildings constructed prior to 1978 may contain lead paint which could be disturbed during replacement. For more information on proper management of lead paint, visit www.epa.gov/lead

Fasteners:

⚠ WARNING

Metal fasteners and components may corrode when exposed to preservative-treated and/or fire-retardant treated lumber. Use approved fasteners and components to fasten unit. Failure to do so may cause a failure resulting in injury, property or product damage.

Fastener Chart:

Application	Anchor Type	Anchor Size	Minimum Embedment	Minimum Clearance to Masonry Edge	Minimum Clearance to Adjacent Anchor
1X Buck	Wood Screw	#8	1-1/2"	NA	Every other Hole
1X Buck	Roofing Nail		1-1/2"	NA	

This fastener schedule is provided as an example of fastening requirements. Requirements may vary by product, building type, application and region. Contact your local building code official for requirements in your area.

Finishing, Cleaning and Maintenance Instructions:

CAUTION

Do not stain or paint weatherstrip, vinyl, glass or hardware. Product damage may occur.

- ***Read and follow finishing product instructions and warnings on finish material.***

CAUTION

♦ Acid solutions used for cleaning masonry or concrete will damage glass, fasteners, hardware, vinyl and metal flashing.
♦ Protect unit and follow cleaning product instructions carefully. If acid contacts unit, wash all surfaces with water immediately.

CAUTION

♦ Abrasive cleaners will damage glass and vinyl surfaces.

♦ Take extra care when cleaning laminates on vinyl profiles.

- ***Clean glass using liquid glass cleaner.***
- ***Clean exterior frame, sash, and insect screens using mild detergent and water with a soft cloth or brush.***
- ***For hard to clean areas use a nonabrasive cleaner, alcohol-and-water or ammonia-and-water.***

⚠ WARNING

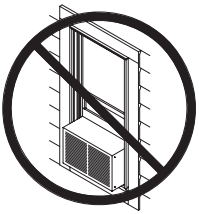

Do not install air conditioner in window. Injury and/or product or property damage may occur. Voids manufactures warranty

- ***Do not apply any type of film to insulating glass. Thermal stress and glass damage can result. Shading devices (insulated coverings, shutters, etc.) may also cause thermal stress damage.***
- ***For continued weather resistance of sealant joints, follow the sealant manufacturer's recommendations for periodic maintenance.***

Step 1

Prepare rough opening.

Check sill plate for level. Sill must be level. Shim sill plate if necessary.

Check rough opening for plumb and level. If rough opening is not plumb or level, correct as necessary.

Check opening for square by measuring diagonally, upper left to lower right and upper right to lower left corner. Measurements must be within 1/8". If rough opening is not square, correct as necessary.

Inspect opening for correct size. Opening should be 1/2" larger than window size in width and height.

Wood Frame

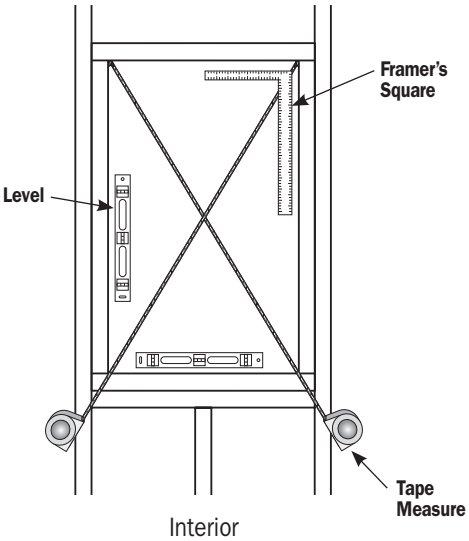

Step 2

Inspect unit.

Remove unit from packaging. Place unit on a clean, flat work surface.

Close and lock sash if applicable to keep unit rigid and square during installation.

Nailing Fin Windows

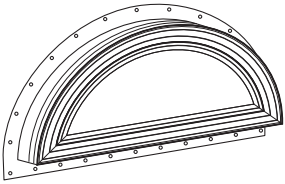

Shape Window

Interior

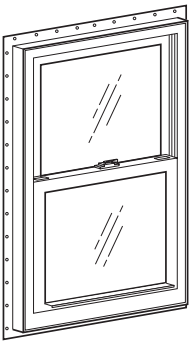

Single-Hung or Double-Hung Window

Interior

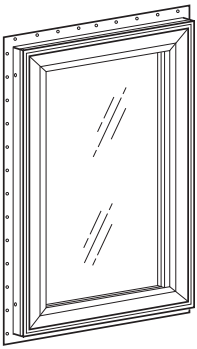

Picture Window

Interior

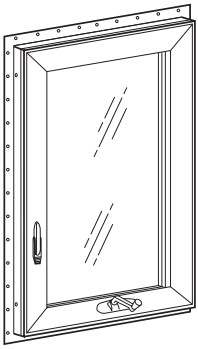

Casement Window

Interior

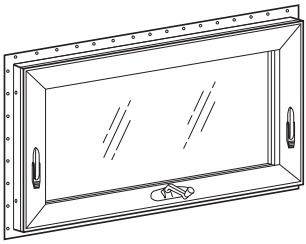

Awning Window

Interior

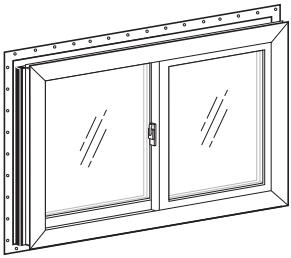

Sliding Window

Interior

Step 3

⚠ WARNING

Windows and doors can be heavy. Use safe lifting techniques and a reasonable number of people with enough strength to lift, carry and install window and door products to avoid injury and/or product damage.

Check fit of window.

Temporarily place window into opening and check for fit. Then remove window.

Adjust opening as needed.

NOTE: Exterior sheathing not shown.

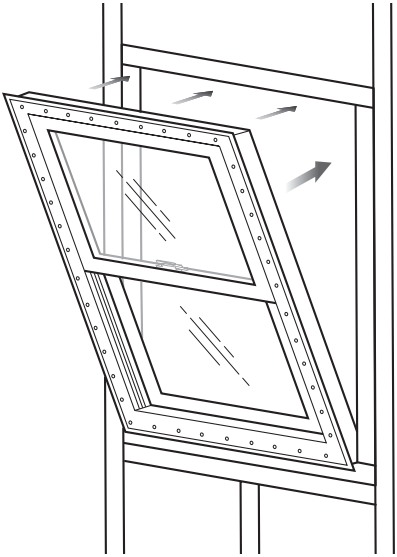

Exterior

Step 4

Apply sill flashing

Apply form-able self-adhering sill flashing into the opening over the sill and 6" up both jambs in one continuous piece.

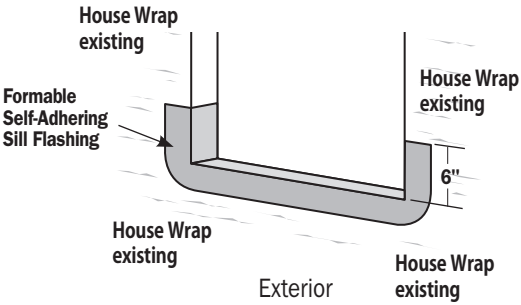

Step 5

Apply sealant.

Apply 3/8" bead of exterior window grade sealant to the back side of the nailing fin jamb and head, in line with the installation holes.

NOTE: When using barrier system, apply a bead of sealant to the bottom nail fin directly over the holes.

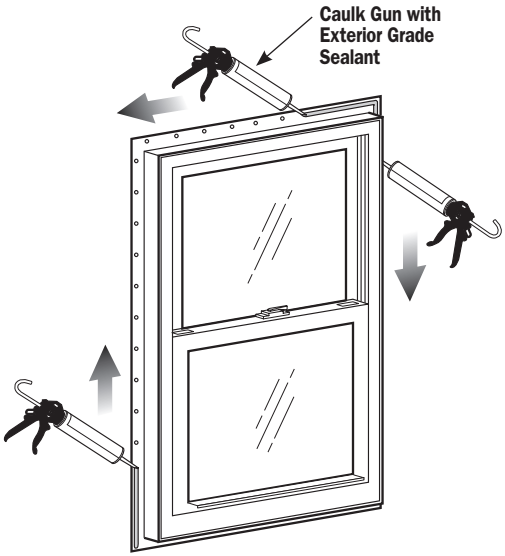

Interior

Step 6

⚠ WARNING

Support window in opening while shimming. Failure to do so may result in injury and/ or product/property damage.

Place window in opening.

Set shims and lift window into rough opening.

Center side-to-side.

Check level of unit from the interior.

Do not set window unit directly on sill.

Make sure shims are located properly under side jambs and any vertical members.

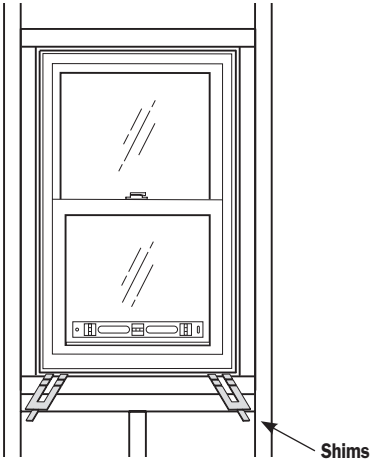

Interior

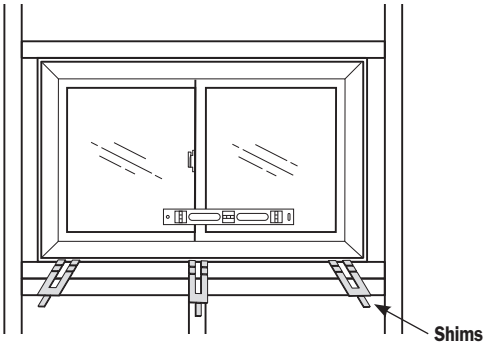

CAUTION

- DO NOT set window unit directly on sill plate. Elevate unit on shims at side jambs. Sill plate may bow and interfere with window operation.
- Unit must be properly shimmed. Failure to do so could result in product damage.
- Provide a minimum clearance of 1/4" from top of brick masonry to the bottom of any portion of sill. Failure to do so could result in product damage.

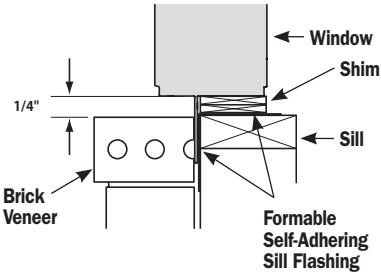

Step 7

Check for square.

Measure diagonally across unit, upper left to lower right and upper right to lower left corner.

If measurements are within 1/8", unit is square.

If unit is not square, adjust by inserting shims as needed.

Do not over shim.

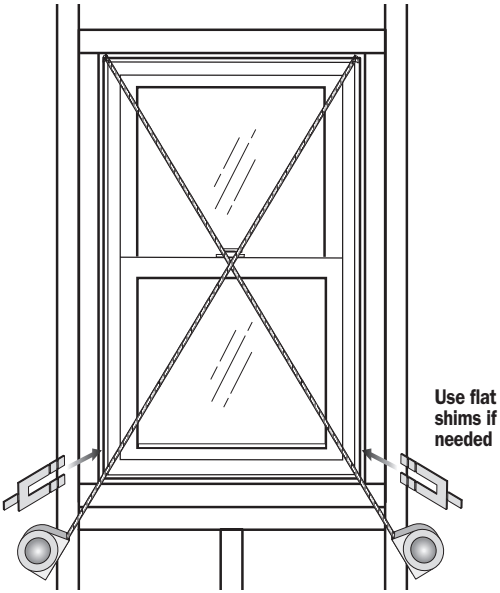

Interior

Step 8

Check for plumb.

Measure across head, center and sill of unit.

Center dimensions should match head and sill dimensions within 1/8".

Check for plumb.

Shim to straighten side jambs as needed.

Do not over shim.

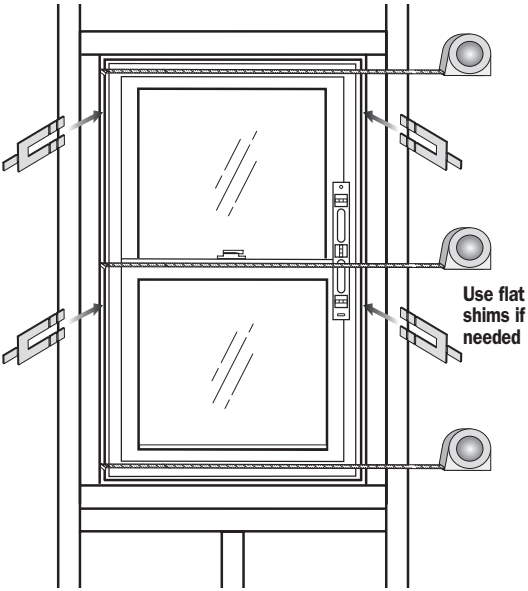

Interior

Step 9

CAUTION

Installation screws, nails, clips and/or structural mullion plates must be securely attached to the rough opening. Failure to do so will reduce the structural performance to less than published values resulting in product/property damage.

Fasten window.

Fasten window to opening.

Make sure the head and sill are not crowned up or down, or the jambs bowed in or out.

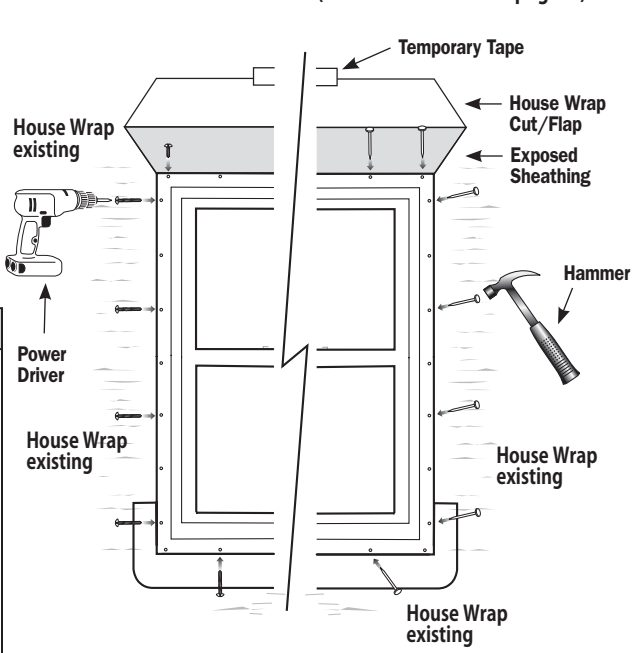

CAUTION

- **Check if frame is bowed. Correct any frame bow during installation. Failure to do so may result in product/property damage.**
- **NOTE: ALL non-continuous frames (mulled), Must apply drip cap into a bed of sealant at head. (Supplied by others)**

Step 10

Apply remaining flashing.

1. Apply flashing over both side jamb nailing fins, overlapping the sill flashing and the head nailing fin.
2. Apply head flashing overlapping side flashing.
3. Fold house wrap flap down over head flashing and apply house wrap tape.

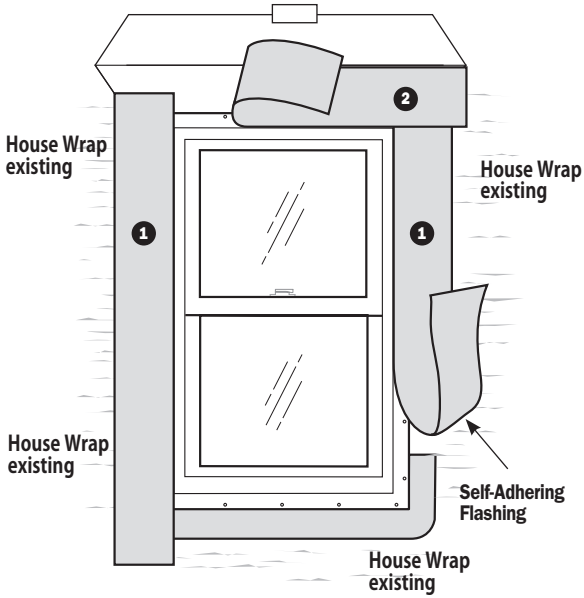

IMPORTANT

To create a weather-tight seal, make sure that the flashing fully covers the entire length of the jambs and head of the window around the window opening. Pay special attention to the corners to make sure that there are not gaps in the flashing.

NOTE: When using barrier systems, apply flashing at sill first, overlapping sill install flange and existing sill flashing.

Attach flashing at sides overlapping sill flashing.

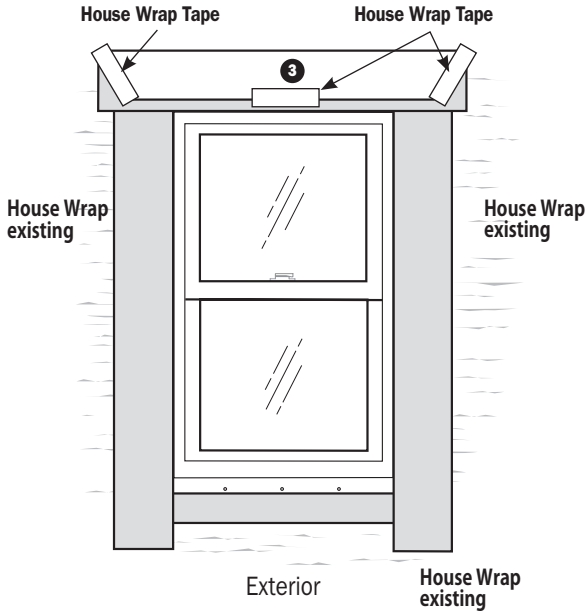

Step 11

Insulate window.

Insulate between frame and rough opening on all sides from the interior.

DO NOT over-pack with backer rod or overfill with foam insulation; bowed jambs may result.

Insulation may expand and affect proper operation.

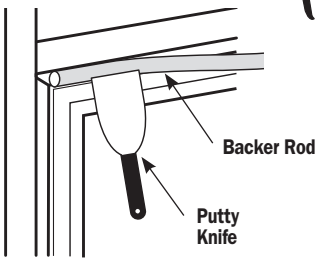

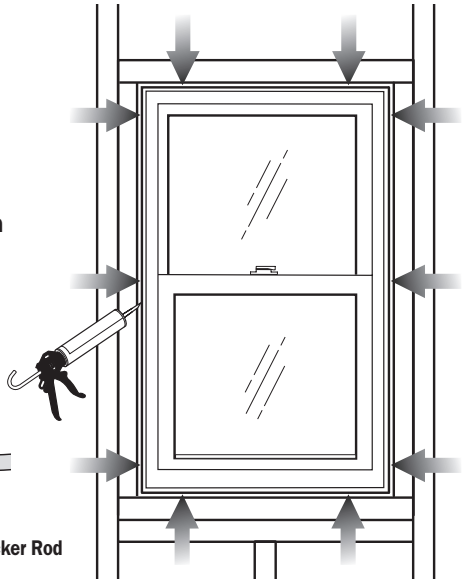

Complete the interior air seal with backer rod and sealant or minimum expanding foam around the entire interior of the window.

CAUTION

When insulating between unit frame and rough opening or between units when joining, DO NOT overfill with minimum expanding foam sealant or over-pack with backer rod. Bowed jambs will result affecting product performance and/or proper operation of unit.

Step 12

Finish interior and exterior.

Finish interior and exterior as appropriate.

NOTICE
A minimum of 1/4" is required around exterior perimeter of unit between frame and siding. Masonry/Brick Veneer installations require a minimum 1/4" space around the remaining perimeter. The space between the masonry/brick veneer should be finished with backer rod and sealant.